Cambridge Assessment International Education

Cambridge International AS & A Level

CANDIDATE NAME	

CENTRE NUMBER						CANDIDATE NUMBER				

4972456805

PHYSICS **9702/31**

Paper 3 Advanced Practical Skills 1 **May/June 2023**

2 hours

You must answer on the question paper.

You will need: The materials and apparatus listed in the confidential instructions

INSTRUCTIONS

- Answer **all** questions.
- Use a black or dark blue pen. You may use an HB pencil for any diagrams or graphs.
- Write your name, centre number and candidate number in the boxes at the top of the page.
- Write your answer to each question in the space provided.
- Do **not** use an erasable pen or correction fluid.
- Do **not** write on any bar codes.
- You will be allowed to work with the apparatus for a maximum of 1 hour for each question.
- You should record all your observations in the spaces provided in the question paper as soon as these observations are made.
- You may use a calculator.
- You should show all your working and use appropriate units.

INFORMATION

- The total mark for this paper is 40.
- The number of marks for each question or part question is shown in brackets [ ].

For Examiner's Use	
1	
2	
Total	

This document has **12** pages.

© UCLES 2023

You may not need to use all of the materials provided.

1 In this experiment, you will investigate a balanced metre rule.

You have been provided with three springs and a metre rule with masses attached to its centre.

(a) The unstretched length of the single spring is S_1, as shown in Fig. 1.1.

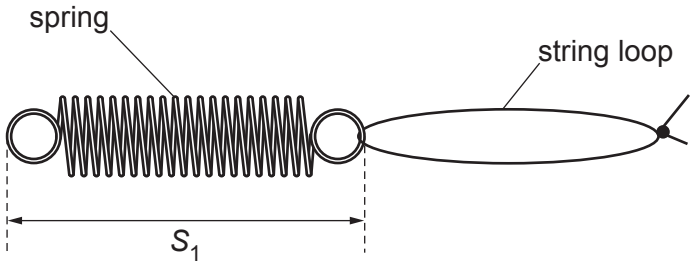

Fig. 1.1

The unstretched length of the connected springs is S_2, as shown in Fig. 1.2.

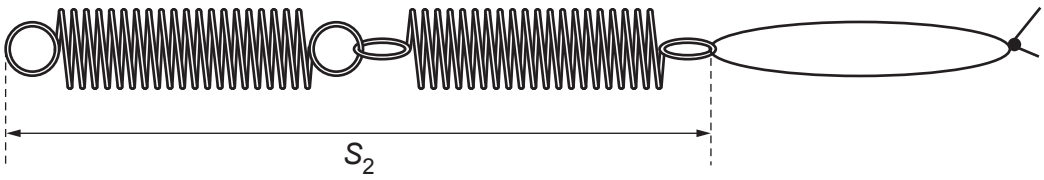

Fig. 1.2

Measure and record S_1 and S_2.

S_1 = ...

S_2 = ...
[1]

(b) (i) ● Set up the apparatus as shown in Fig. 1.3.

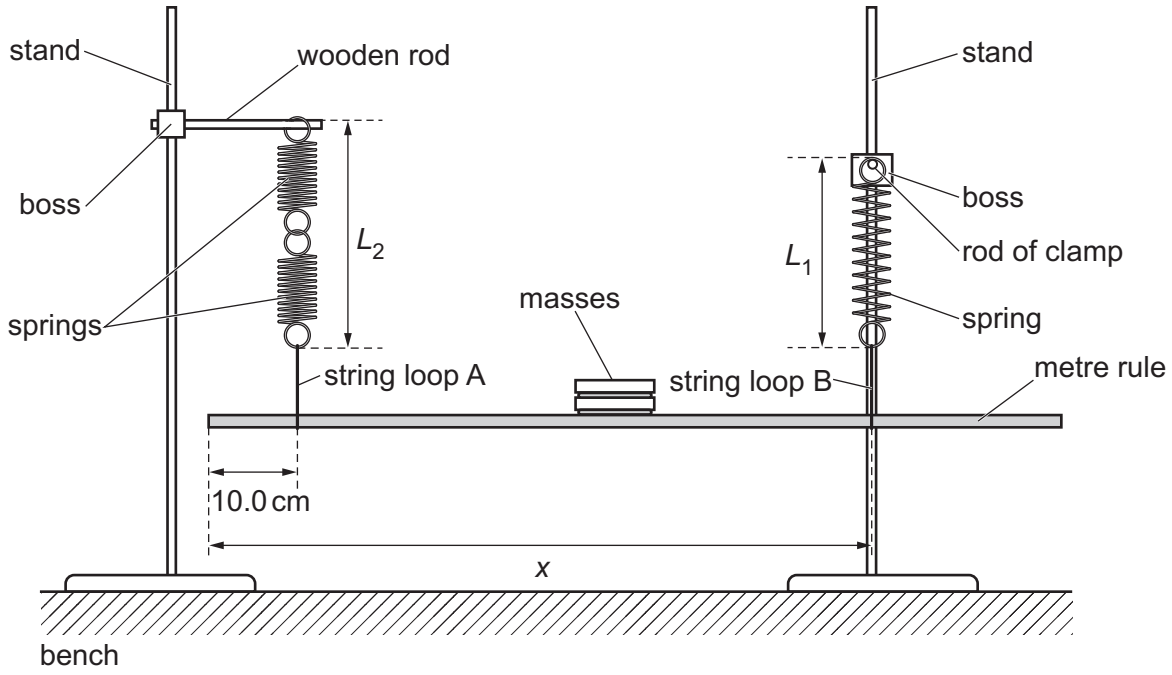

Fig. 1.3

- Two string loops A and B are supporting the rule.

  Loop A should be placed 10.0 cm from one end of the rule.

- The distance between the end of the rule and loop B is x. Move loop B until x is approximately 75 cm.

- Measure and record x.

  x = ...

- Without changing the positions of the string loops, adjust the apparatus until the rule is parallel to the bench and the springs and the string loops are vertical.

- The extended length of the single spring is L_1.
  The extended length of the connected springs is L_2.

  Measure and record L_1 and L_2.

  L_1 = ...

  L_2 = ...

  [1]

(ii) Calculate e_1 and e_2, where

$$e_1 = L_1 - S_1 \text{ and } e_2 = L_2 - S_2.$$

e_1 = ...

e_2 = ...

[1]

(c) Vary x by changing the position of loop B. Loop B must remain on the right-hand side of the masses. Keep loop A in the **same** position.

For each value of x, adjust the apparatus until the rule is parallel to the bench and the springs and the string loops are vertical. Measure x, L_1 and L_2. Repeat until you have five sets of values.

Record your results in a table. Include values of e_1, e_2 and $\frac{e_2}{e_1}$ in your table.

[8]

(d) (i) Plot a graph of $\frac{e_2}{e_1}$ on the y-axis against x on the x-axis. [3]

(ii) Draw the straight line of best fit. [1]

(iii) Determine the gradient and y-intercept of this line.

gradient = ...

y-intercept = ...

[2]

© UCLES 2023

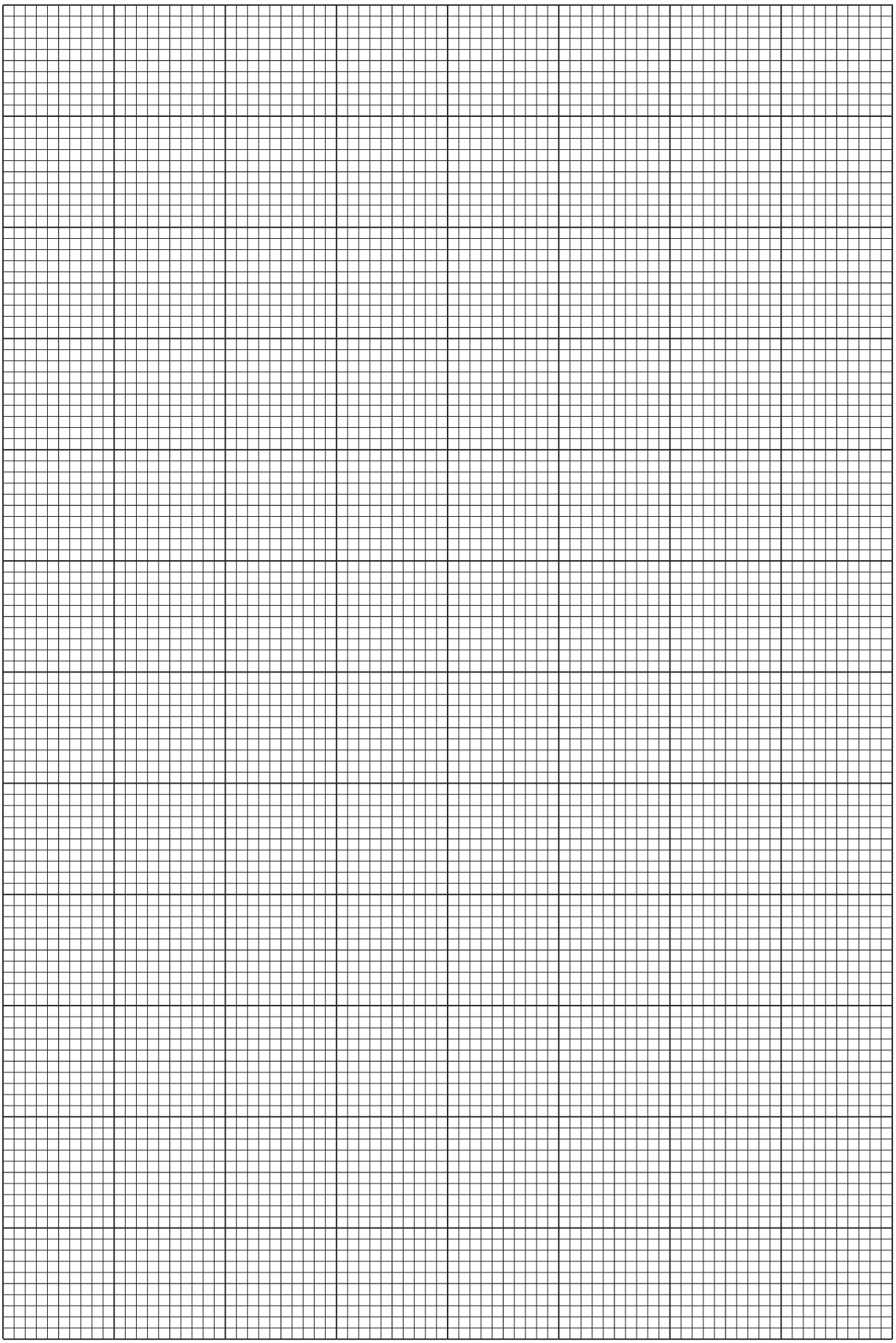

© UCLES 2023

[Turn over

(e) It is suggested that the quantities e_1, e_2 and x are related by the equation

$$\frac{e_2}{e_1} = Px - Q$$

where P and Q are constants.

Using your answers in **(d)(iii)**, determine the values of P and Q.
Give appropriate units.

P = ...

Q = ...
[2]

(f) The distance between string loop A and the centre of the rule is w, as shown in Fig. 1.4.

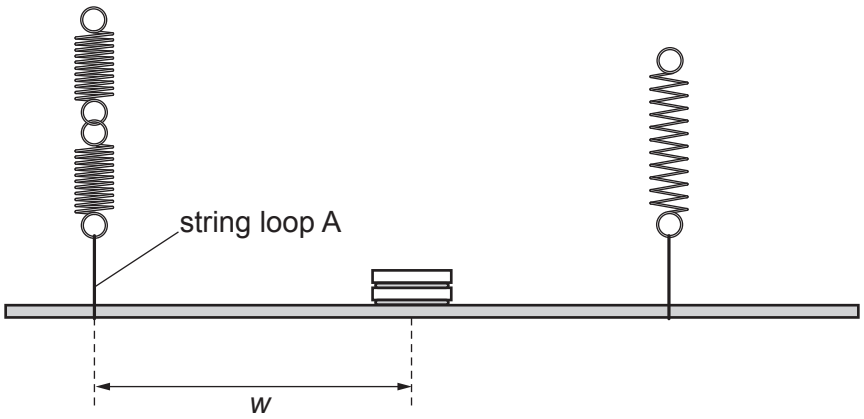

Fig. 1.4

P and Q are each inversely proportional to w.

A student repeats the experiment with loop A placed further from the left-hand end of the rule.

Sketch a second line on the graph to show the expected results.
Label this line W. [1]

[Total: 20]

© UCLES 2023

You may not need to use all of the materials provided.

2 In this experiment, you will investigate the oscillations of a wooden strip and a pendulum.

You have been provided with a wooden strip with two holes G and H.

(a) ● Place the wooden strip on the pivot as shown in Fig. 2.1.

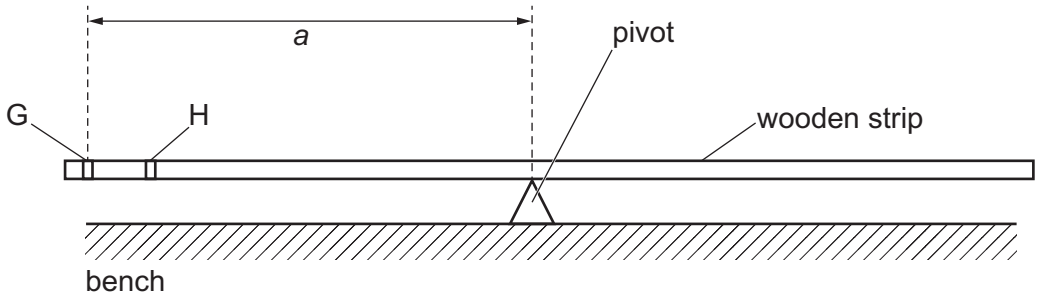

Fig. 2.1

- Adjust the position of the strip on the pivot until the strip balances.
- The distance between G and the pivot is *a*.

  Without marking the strip, measure and record *a*.

a = ... [1]

(b) ● Set up the apparatus as shown in Fig. 2.2 with the nail through G.

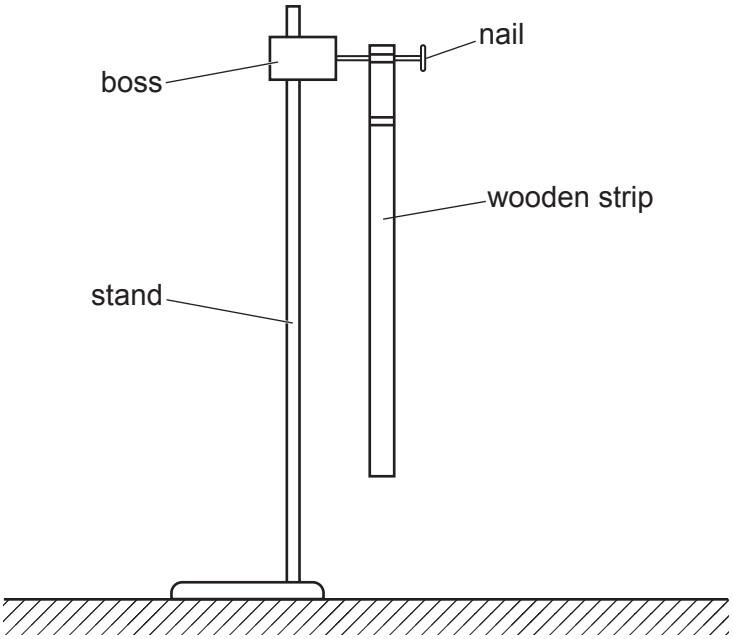

Fig. 2.2

- Pull the bottom of the strip towards you through a short distance.
- Release the strip. The strip will oscillate. The time for 10 oscillations is *t*.

  Measure and record *t*.

t = ... [2]

© UCLES 2023

(c) (i) ● Set up the pendulum as shown in Fig. 2.3.

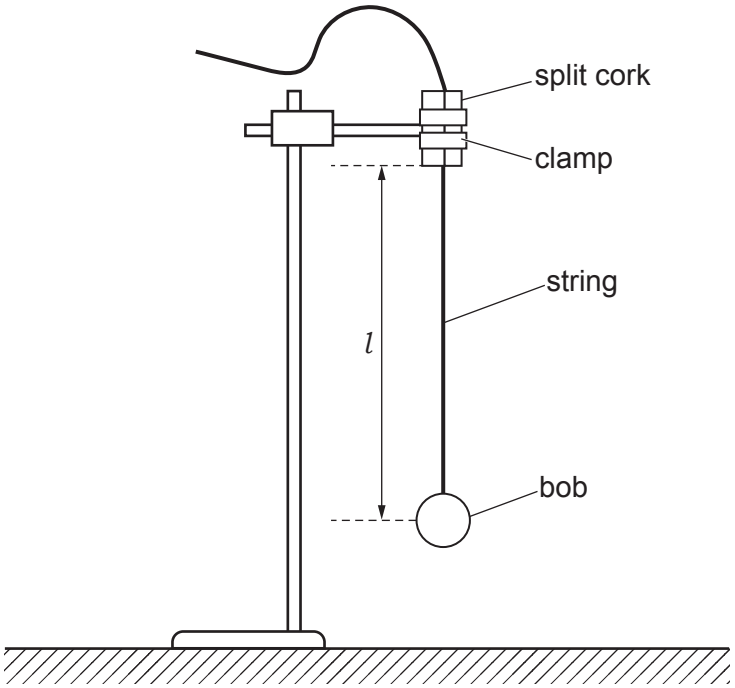

Fig. 2.3

- The distance between the bottom of the split cork and the centre of the bob is l.

  Adjust the position of the string in the split cork until l is approximately 35 cm.
- Pull the bob towards you through a short distance.
- Release the bob. The bob will oscillate.
- Adjust l until the time for 10 oscillations is the same as the value of t in **(b)**.
- Measure and record l.

l = ...

- Calculate $(l - a)$.

$(l - a)$ = ...
[1]

(ii) Estimate the percentage uncertainty in your value of $(l - a)$. Show your working.

percentage uncertainty = ... % [1]

(d) • Using hole H, repeat **(a)**.

a = ...

• Using hole H, repeat **(b)**.

t = ...

• Using this value of t, repeat **(c)(i)**.

l = ...

$(l - a)$ = ...
[3]

(e) It is suggested that the relationship between l and a is

$$(l - a) = \frac{C}{a}$$

where C is a constant.

(i) Using your data, calculate two values of C.

first value of C = ...

second value of C = ...
[1]

(ii) Justify the number of significant figures that you have given for your values of C.

.....

.....

..... [1]

© UCLES 2023

(f) It is suggested that the percentage uncertainty in the values of C is 5%.

Using this uncertainty, explain whether your results support the relationship in **(e)**.

.....

.....

.....

..... [1]

(g) Theory suggests that

$$g = \frac{4\pi^2}{T^2}\left(a + \frac{C}{a}\right)$$

where T is the period of the oscillations of the wooden strip and g is the acceleration of free fall.

- Use your value of t from **(d)** to determine T.

T = ...

- Use your value of a from **(d)** and the corresponding value of C to determine a value for g. Give an appropriate unit.

g = ...
[1]

(h) (i) Describe **four** sources of uncertainty or limitations of the procedure for this experiment.

For any uncertainties in measurement that you describe, you should state the quantity being measured and a reason for the uncertainty.

1 .....

.....

2 .....

.....

3 .....

.....

4 .....

.....

[4]

(ii) Describe **four** improvements that could be made to this experiment. You may suggest the use of other apparatus or different procedures.

1 .....

.....

2 .....

.....

3 .....

.....

4 .....

.....

[4]

[Total: 20]

Permission to reproduce items where third-party owned material protected by copyright is included has been sought and cleared where possible. Every reasonable effort has been made by the publisher (UCLES) to trace copyright holders, but if any items requiring clearance have unwittingly been included, the publisher will be pleased to make amends at the earliest possible opportunity.

To avoid the issue of disclosure of answer-related information to candidates, all copyright acknowledgements are reproduced online in the Cambridge Assessment International Education Copyright Acknowledgements Booklet. This is produced for each series of examinations and is freely available to download at www.cambridgeinternational.org after the live examination series.

Cambridge Assessment International Education is part of Cambridge Assessment. Cambridge Assessment is the brand name of the University of Cambridge Local Examinations Syndicate (UCLES), which is a department of the University of Cambridge.

© UCLES 2023